Instructions for use

HOME DELUXE
WIR MACHEN ZUHAUSE

Traditional sauna SHADOW L



Original instructions for use

Designed in Germany

IMPORTANT:
KEEP FOR FUTURE REFERENCE. READ CAREFULLY!

Table of contents

1. General 3
1.1. Product overview 3
1.2. General information....3
1.3. Warranty....3
2. Information on the instructions for use 4
2.1. Translation information 4
2.2. Availability of the instructions for use....4
2.3. Target groups of the instructions for use....4
2.4. Explanation of symbols 4
2.5. General information on the instructions for use....5
2.6. Intended use....5
2.7. Safety instructions....5
3. Product features 7
3.1. Technical data....7
3.2. Product description....8
4. Scope of delivery....8
5. Assembly of the sauna....13
5.1. Safety instructions....13
5.2. Structure of the product....13
5.3. Sauna heater model: SCA-45....21
5.4. Safety instructions....21
5.5. Installation and electrical connection of the sauna heater....22
6. Application....24
6.1. Safety instructions....24
6.2. Initial commissioning....25
6.3. Operation....26
6.4. Controls....26
6.5. Sauna stones and sauna infusion....27
6.6. Sauna recommendations....28
7. Troubleshooting....28
8. Maintenance and care....29
9. Disassembly....30

9.1. Safety instructions.....30
10. Disposal instructions 30
11. Electrical and electronic equipment - Information for private households.....31

Dear customer,

Thank you for choosing a product from **Home Deluxe GmbH.** We wish you much pleasure with your new "Traditional Sauna SHADOW L".

The instructions for use support you during installation, commissioning, operation and maintenance of the product. The instructions for use and the safety instructions must be read carefully and completely. Observe these instructions in order to avoid dangers.

1. General

1.1. Product overview

Model: Traditional Sauna SHADOW L

Item ID: 20336	|	Variants ID: 49253
Package 1/5 ID: 20337	|	Variants ID: 49254
Package 2/5 ID: 20338	|	Variants ID: 49255
Package 3/5 ID: 20339	|	Variants ID: 49256
Package 4/5 ID: 20340	|	Variants ID: 49257
Package 5/5 ID: 20341	|	Variants ID: 49258

1.2. General information

In order to live up to our claim, we are constantly improving the quality, simplifying the assembly, operation or adapting the products to the customer's wishes. Due to these changes, the current version of the instructions for use can be found on our homepage.

The term "product" is used in the instructions for use for the "SHADOW L traditional sauna" unless individual reference is made to the sauna, sauna cabin or sauna heater.

1.3. Warranty

The statutory liability for defects and warranty rights apply from the date of purchase.
Home Deluxe GmbH accepts no liability for damage caused by failure to observe the instructions for use. Complaints resulting from improper assembly or use are excluded from the warranty. In the event of defects in this product, please contact the manufacturer in writing:

Home Deluxe GmbH
Schanzeweg 2
32312 Lübbecke
Germany
Tel.: +49 (0)5743 6181-0
E-mail: info@homedeluxe.de
www.home-deluxe-gmbh.de

Our service team will be happy to answer any further questions you may have.

2. Information on the instructions for use

2.1. Translation information

The original instructions for use were written in German. Any other language available is a translation of the German version.

2.2. Availability of the instructions for use

The instructions for use are part of the product and should be kept complete and in the immediate vicinity of the product. Due to changes, the current version of the instructions for use can be found on our homepage.

2.3. Target groups of the instructions for use

The instructions for use must be read and observed by every person involved in any of the following activities or use:

- Unpack
- Assembly / Installation
- Commissioning / Operation
- Maintenance / Testing / Care
- Troubleshooting / Repair
- Disposal

2.4. Explanation of symbols

Symbol	Explanation of symbols
	**WARNING** The symbol indicates possible hazards that can cause fatal and serious injuries. Before carrying out the corresponding assembly or application step, the corresponding note must be read.
	**INFO** The symbol gives important information and indicates damage to property. Observe these before carrying out the corresponding assembly or application step in order to understand problems and avoid damage.
	**CE marking** The symbol declares the conformity of the product with the applicable requirements imposed by the European Community. The current declaration of conformity is available from Home Deluxe GmbH on request.
	**Follow the instructions for use** The symbol indicates that the instructions for use must be read carefully before assembly/installation and/or operation of the product.
	**Read instruction manual** The symbol indicates that the instructions for use must be read carefully before using the product.
	**Covering prohibited** The symbol indicates that it is forbidden to place anything on or cover the sauna heater.

Symbol	Explanation of symbols
	**Disposal of electrical and electronic equipment** Electrical and electronic equipment must not be disposed of with household waste!
	**Protection class I** The symbol indicates that all conductive housing parts of the equipment must be connected to the protective earth conductor system of the fixed electrical installation. It is a protective earth. In the event of a fault current, the circuit is de-energised by a fuse.
	**Alternating current** The symbol indicates that the product is operated with alternating current.

2.5. General information on the instructions for use

The instructions for use refer to the Traditional Sauna SHADOW L. They contain important information on installation, operation, maintenance and cleaning. The instructions for use, in particular the safety instructions, must be read carefully before the product is put into operation. Only use the product as described in these instructions for use to prevent accidental injury or damage. If the product is passed on to third parties, these instructions for use must also be handed over.

2.6. Intended use

The sauna is of high quality, durable and exclusively intended or suitable for private use to a reasonable and customary extent. Furthermore, our product is not intended for commercial use. Commercial use is only permitted with the written consent of Home Deluxe GmbH.

The sauna is exclusively for saunas for max. 3 people indoors.
The sauna heater is used exclusively to heat the sauna cabin to sauna temperature.

Only use the product as described in these instructions for use. Any other use is considered improper and may result in damage to property or personal injury. The manufacturer accepts no liability for damage caused by improper or incorrect use.

2.7. Safety instructions

General hazard warnings



- Improper handling can lead to considerable personal injury and damage to property. For this reason, assembly, installation, commissioning, troubleshooting, maintenance and repair work may only be carried out by qualified persons.
- **Only** assemble the product if the scope of delivery is complete and in perfect condition.
- Make sure that all parts are undamaged and properly assembled. Improper assembly may result in injury. Damaged parts can affect safety and function.
- Only place the product on a safe, level and solid surface.
- The product can be used by children aged from 8 years and above and persons with reduced physical, sensory or mental capabilities or lack of experience and knowledge if they have been given supervision or instruction concerning use of the product in a safe way and understand the hazards involved.
- **Danger to life!** No door lock or other locking device may be fitted to the sauna/door, the sauna cabin must always be freely accessible.
- Keep pets away from the sauna.

Danger for children



- Keep children away from packaging materials. There is a risk of suffocation, among other things!
- Children must not play in and on the product.
- Keep children away from the sauna and the sauna heater.
- Do not place the product directly or in the immediate vicinity of a play area.
- Cleaning and user maintenance must not be carried out by children without supervision.

Risk of injury

Improper handling of the product may result in injury.



- Do not make any constructive changes to the product. For any modification, the permission of the manufacturer must be obtained and carried out according to the manufacturer's instructions.
- **Danger to life due to electrical voltage:** To avoid burns or electric shocks, make sure that no metallic objects or tools come into contact with the heating elements.
- **Danger to life due to electrical voltage:** To avoid the risk of electric shock, all installations and corresponding maintenance work must be carried out by a qualified electrician.
- **Danger to life from electrical voltage:** If the power supply cable is damaged, take the product out of operation until the power supply cable is replaced by the manufacturer, its customer service or a qualified electrician.

Risk of damage



- Improper handling of the product can lead to damage.
- Repair and maintenance work on the electrical system may only be carried out by a qualified electrician.

Explosion hazard



- In the event of a fire, notify the fire brigade immediately and make sure that no one is in the sauna.
- **Caution:** Do not store highly flammable, combustible or explosive substances inside the product. Highly flammable substances can catch fire.

3. Product features

3.1. Technical data

Sauna	
Material	Spruce wood
Dimensions (W x H x D)	1500 x 1900 x 1200 mm
Wall thickness back wall	approx. 44 mm
Wall thickness side wall	approx. 44 mm
Top seat (L x W)	approx. 1388 x 450 mm
Seat bottom (L x W)	approx. 1388 x 300 mm
Sauna operation	max. 3 persons
Glass panes	8 mm (toughened safety glass)

Sauna heater	
Supply voltage	380 V AC
Frequency	50 Hz
Sauna heater	4.5 KW
Protection class	I
Depth	300 mm
Wide	420 mm
Height	600 mm
Weight	10 kg
Protection class[1)]	IPX4
Temperature range	max. 80 - 100°C

Sauna lamp	
Supply voltage	220 - 240 V AC
Frequency	50 - 60 Hz
Power	max. 40 W / E27
Protection class[1)]	IPX4

1) IPX4: Protection against splashing water from all directions

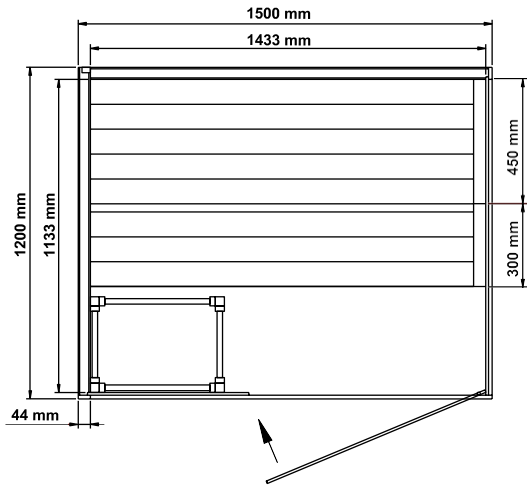

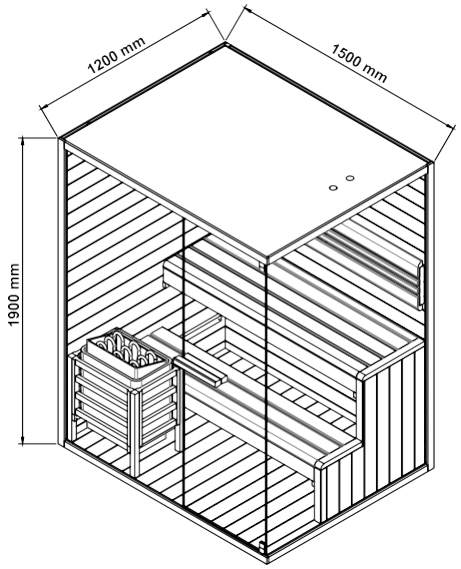

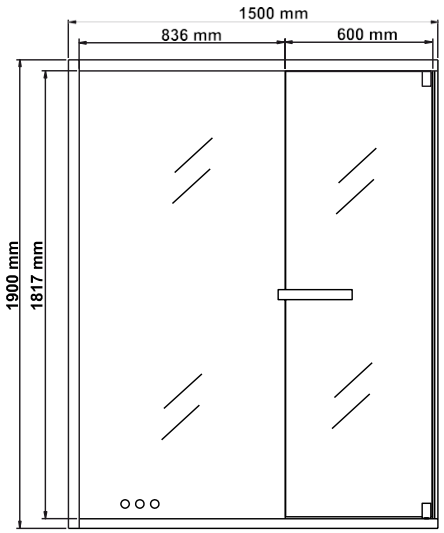

3.2. Product description

The product made of spruce wood is suitable for indoor use. The efficient sauna heater and the front design made of single-pane safety glass provide a pleasant and soothing feeling, which ensures ideal relaxation and regeneration.

4. Scope of delivery

Check the packaging for external damage upon delivery. Furthermore, immediately after unpacking, check that the scope of delivery is complete and that the product and all components are in perfect, undamaged condition. Only assemble the product if the scope of delivery is complete and undamaged.

The E27 bulb is not included and can be purchased separately from a retailer. Make a note of the serial number of the control unit, as this number is required in case of repair or ordering of spare parts.

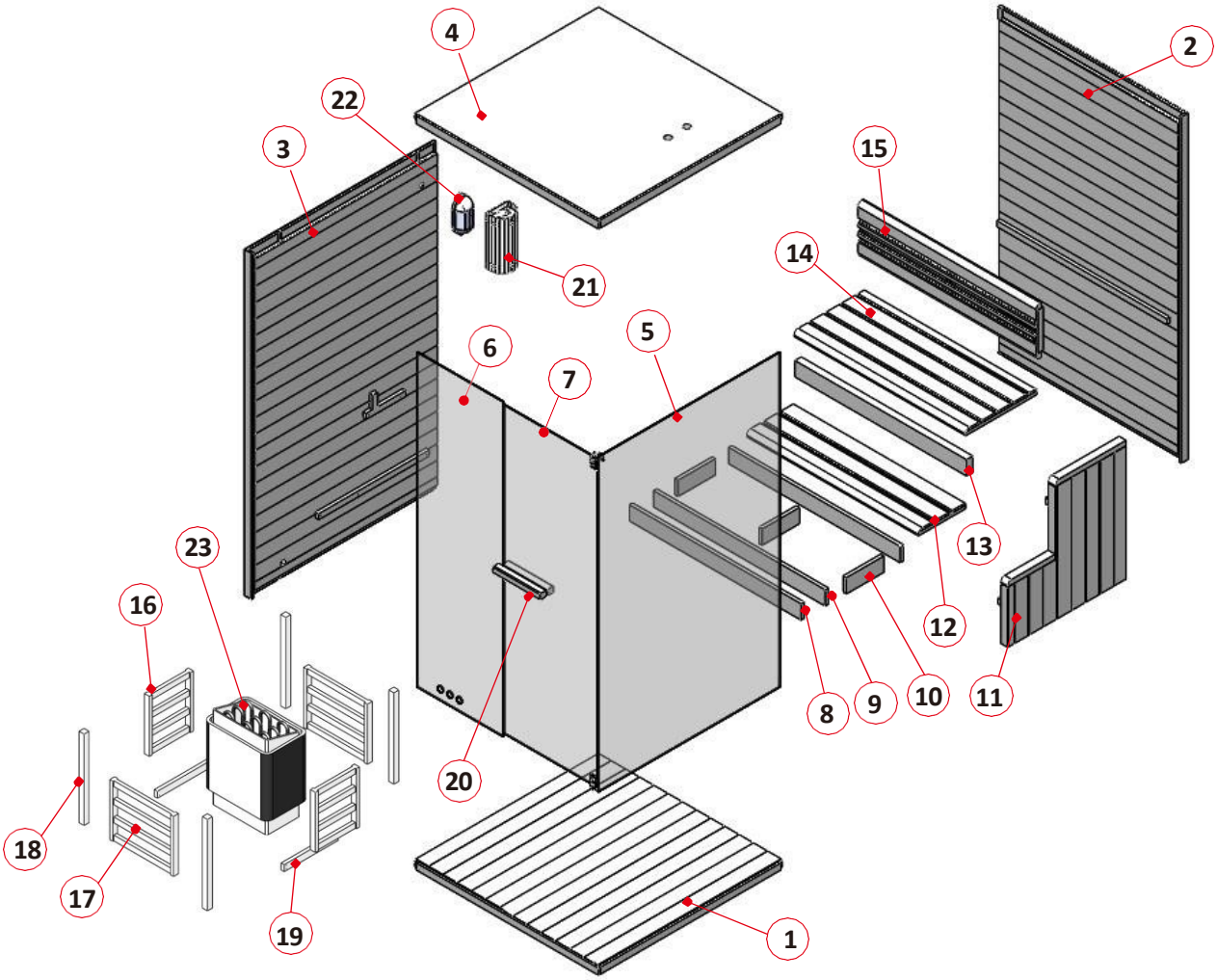

No.	Description	Number	Figure
1.	Base plate (1479 x 1179 x 39 mm)	1	
2.	Rear wall (1900 x 1486 x 44 mm)	1	

No.	Description	Number	Figure
3.	Side wall (1900 x 1200 x 44 mm)	1	
4.	Sauna roof (1479 x 1179 x 44 mm)	1	
5.	Side window (1837 x 1151 x 8 mm)	1	
6.	Glass front (1837 x 843 x 8 mm)	1	
7.	Glass door (1803 x 594 x 8 mm)	1	
8.	Front fairing seat bottom (1388 x 90 x 20 mm)	1	
9.	Substructure bench (1388 x 90 x 20 mm)	2	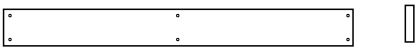
10.	Substructure bench (238 x 90 x 20 mm)	3	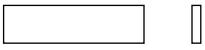
11.	Bench rest (761 x 750 x 44 mm)	1	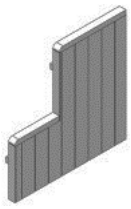
12.	Bench below (1388 x 300 x 33 mm)	1	

No.	Description	Number	Figure
13.	Front panelling bench top (1388 x 90 x 40 mm)	1	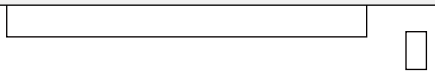
14.	Top bench (1388 x 450 x 33 mm)	1	
15.	Backrest (1430 x 300 x 43 mm)	1	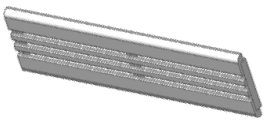
16.	Oven guard side panel (370 x 280 x 33 mm)	2	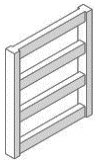
17.	Oven guard front and back (420 x 370 x 33 mm)	2	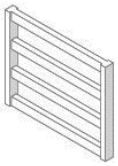
18.	Oven guard corner post (600 x 33 x 33 mm)	4	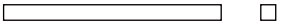
19.	Skirting Stove Guard (335 x 33 x 20 mm)	2	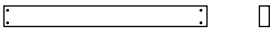
20.	Door handle complete Outside (300 x 40 x 40 mm) Inside (270 x 40 x 40 mm)	1	
21.	Lampshade (300 x 142 x 105 mm)	1	
22.	Lamp cover	1	
23.	Sauna heater	1	
24.	Catch tray (410 x 270 x 30 mm)	1	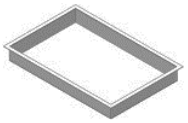
25.	Door hinge	2	

No.	Description	Number	Figure
26.	Cabin ventilation	1	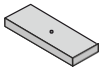
27.	Rubber seal	2	
Z 1	Sauna set: - Thermometer - Sauna ladle - Sauna bucket - Hourglass	1	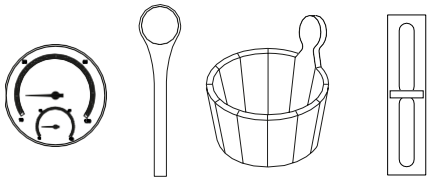
Z 2	Sauna stones	1	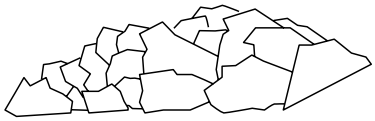

Mounting material (variations possible)

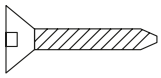							 Glass clip	 Underlay	 Cap door handle	 Angle
Ø3x16	Ø4x30	Ø4x45	Ø4x60	Ø6x60	Ø4x5	Ø5x8	Glass clip	Ø14	Ø16	30 x 30 x 16
13x	30x	32x	16x	2x	1x	1x	1x	2x	2x	1x

5. Assembly of the sauna

Installation site

The installation of the sauna may be regulated by building regulations. The permit to install the sauna can be withdrawn by the authorities if the installation conditions are violated.

- Consult the competent authority before erecting.
- Applicable regulations must be adhered to.
- Mount the product on a level, solid surface.
- Assemble the product in a dry place.
- The product is only suitable for indoor use.
- Keep a safety distance of at least 2 metres from other structures. This makes installation easier and can save lives in the event of a fire.
- The room height for the installation is at least 2.17 m.

5.1. Safety instructions

The following health and safety information must be read carefully.

Risk of injury

Improper handling during assembly can lead to injuries

- Your product will be delivered in 5 packages. Please make sure that the packages are opened at the top. Be very careful when opening the parcels as there are fragile parts and glass in the parcels.
- **Only** assemble the product if the scope of delivery is complete and undamaged.
- Only place the product on a safe, level and solid surface.
- To avoid injury, at least 2 people are required to assemble the product.
- Wear protective clothing such as safety shoes and protective gloves during assembly.
- Keep children away from the assembly site while assembling the product. The scope of delivery contains small parts that can be swallowed or cause serious injuries.

5.2. Structure of the product

The product is delivered disassembled and can be assembled with a little effort. Follow the assembly instructions carefully. The function and safety of the product cannot be guaranteed if these instructions are not followed.

Tools needed

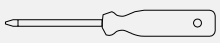	Screwdriver		Measuring tape
	Allen key		Hammer
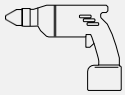	Drilling machine		Stepladder
	Spirit level		Cutter knife
	Pencil		Twist drill

Preparation for setting up the sauna:

Only install the product indoors on a level, stable and horizontal surface. For better stability, we recommend placing the product on a foundation or similar.

At least 2 people are required for these steps.

Step 1: Assembling the base plate and wooden walls

- Place the base plate on a level, stable and horizontal surface. (**Note direction**)
- Position the back wall (**2**) and the side wall (**3**) behind the bottom panel (**1**) and push them flush and close together.
- Push the connection cable for the oven through the holes in the side wall. (**see marking**)
- Screw the two walls and the base plate together from the back.

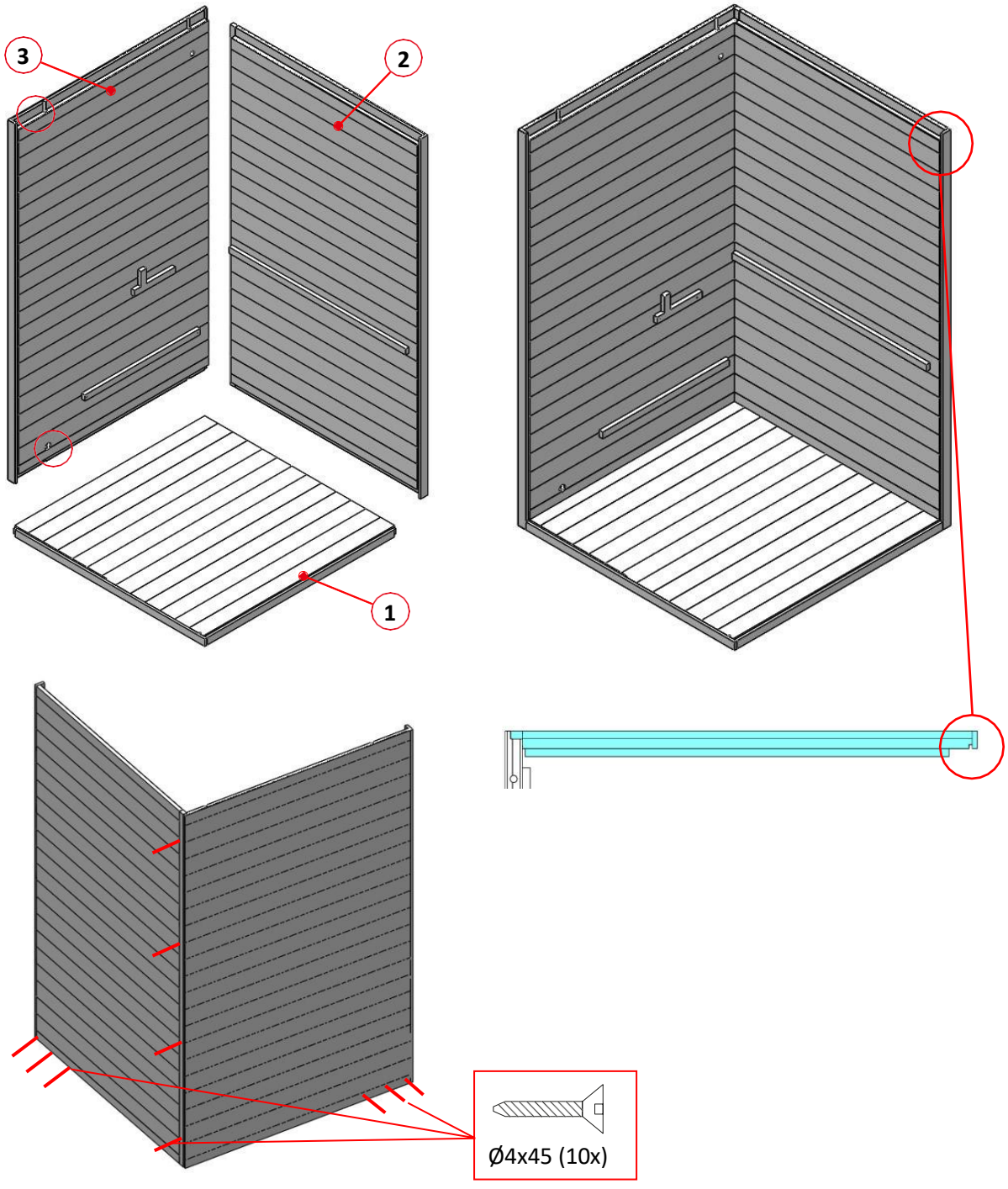

Step 2: Mounting the glass panes

- Place the side panel (**5**) and glass front (**6**) on the outer ledges on the base plate.
- Note that the hole in the glass pane (**5**) points to the front/. (**see marking**)
- Note that the three ventilation holes in the glass front (**6**) at the bottom point towards the base plate. (**see marking**)
- Slide both glass walls in the groove directly up to the side and rear wall. (**see marking**)

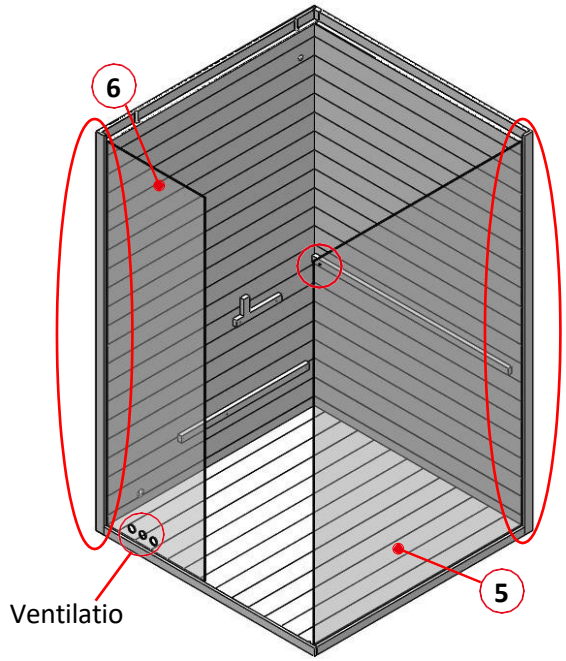

Step 3: Assembling the sauna roof

- Position the sauna roof (**4**) on top of the slats of the side and back wall.
- Position the sauna roof over the glass panes at the same time, the glass panes must rest against the strips of the sauna roof (**see marking**, the ventilation holes **must** point towards the large glass pane).
- Screw the bracket to the glass panel and the sauna roof from the inside (the glass panel is pre-drilled).
- Screw the sauna roof to the side and back walls from above.

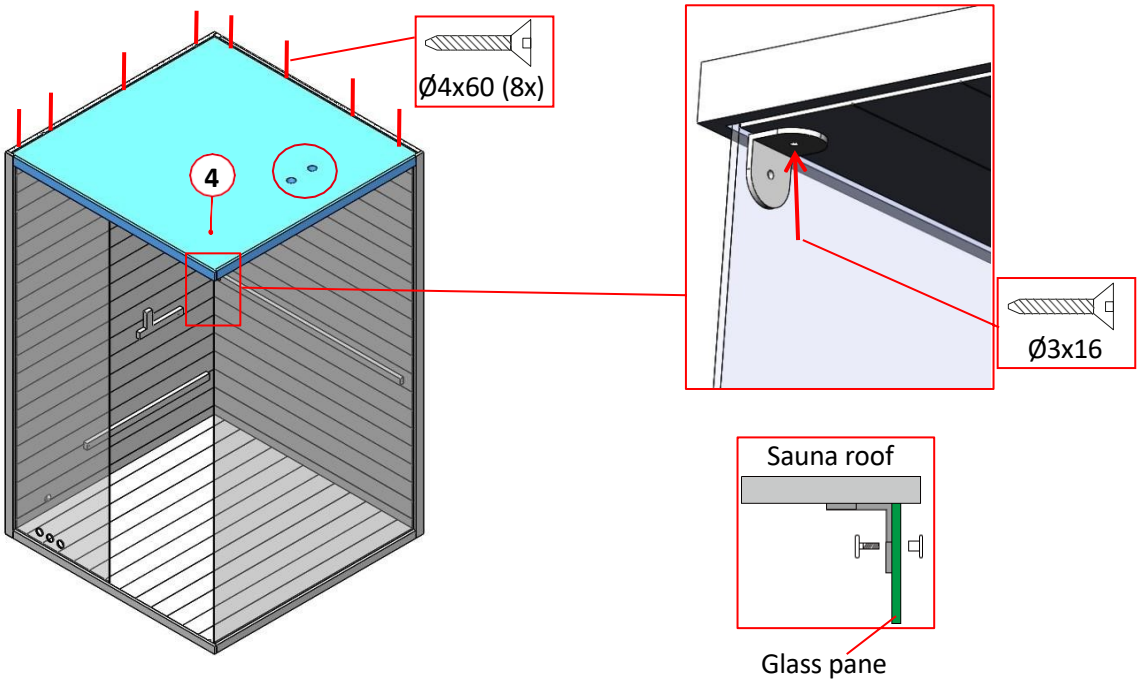

Step 4: Assembling the bench seat

- Position the bench support (**11**) in front of the large glass panel and push it up to the rear wall.
- Screw the bench seat support to the rear wall from behind.

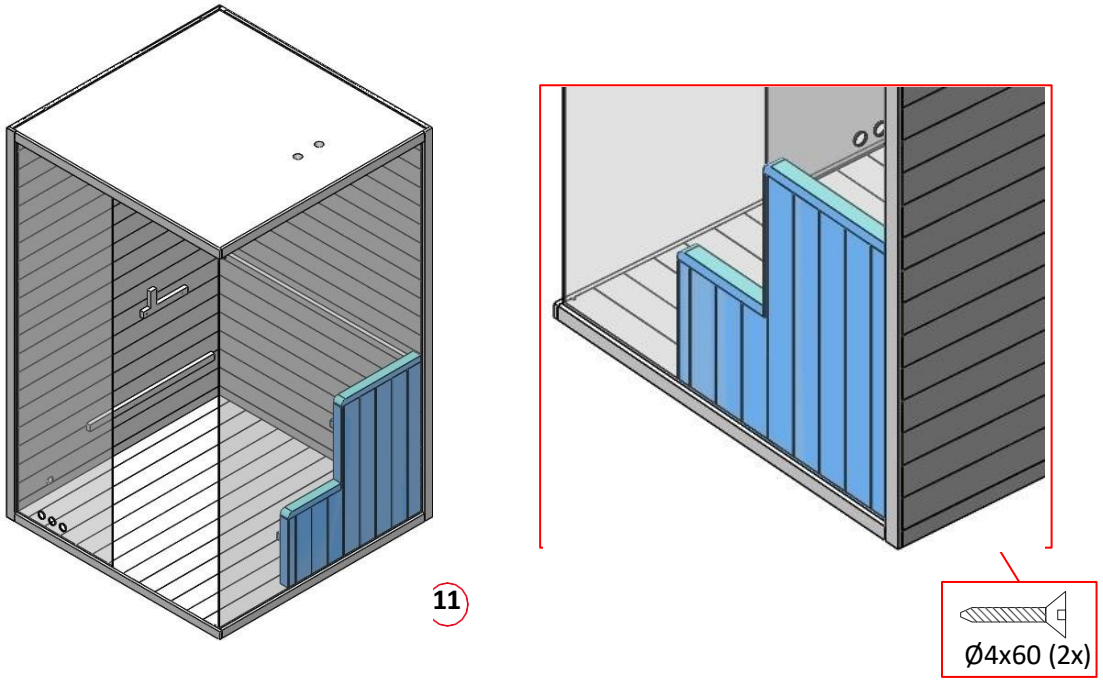

Step 5: Mounting the cladding and substructure of the seat surface

- Screw the substructure (**9** / **10**), then fit the front panelling (**8**) in front of the substructure and place it flush with the battens on the lower side supports.
- Place the front fairing (**13**) on the upper slats and screw it in place from behind.

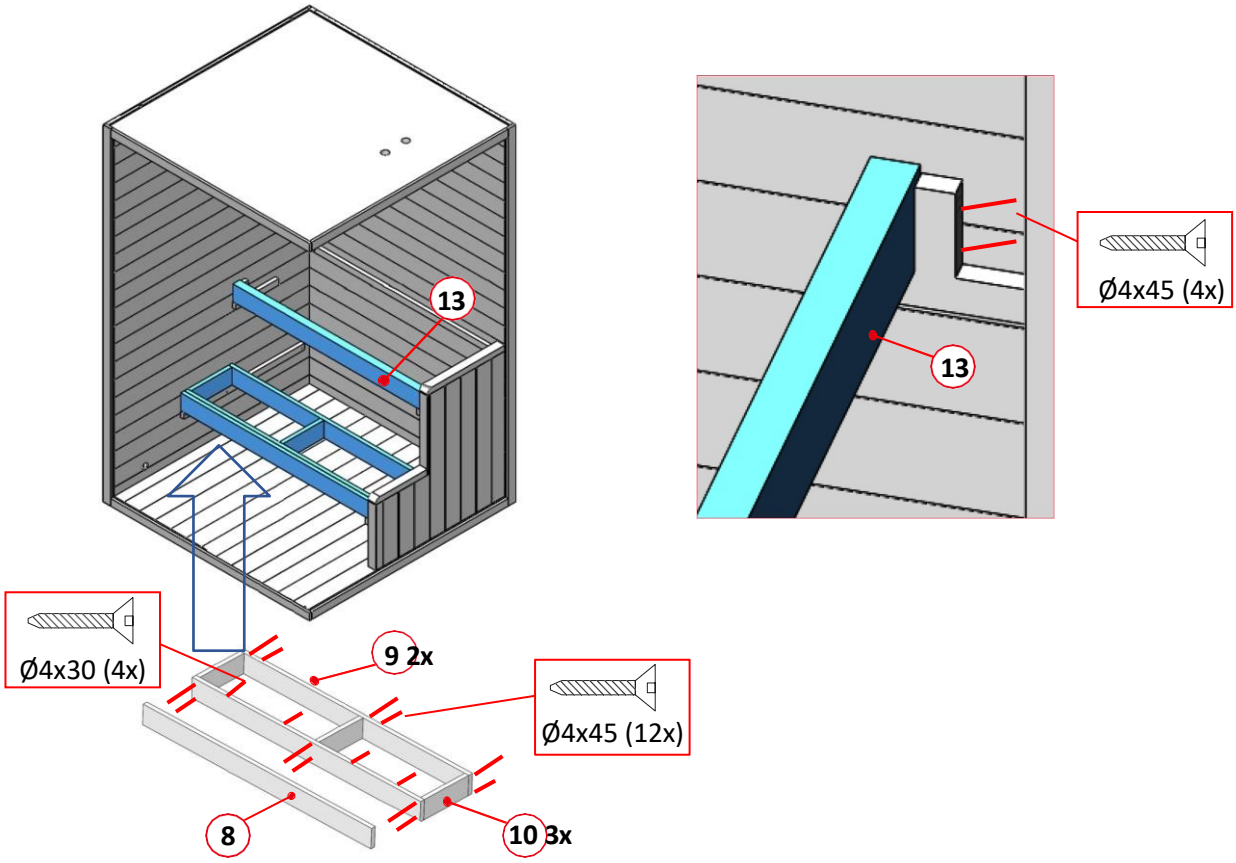

Step 6: Mounting the vent and the seats

- Screw the cabin vent (**26**) under the sauna roof.
- Place the seat (**14**) on the upper support.
- Place the seat (**12**) on the lower support.
- The seats do **not** need to be screwed together.

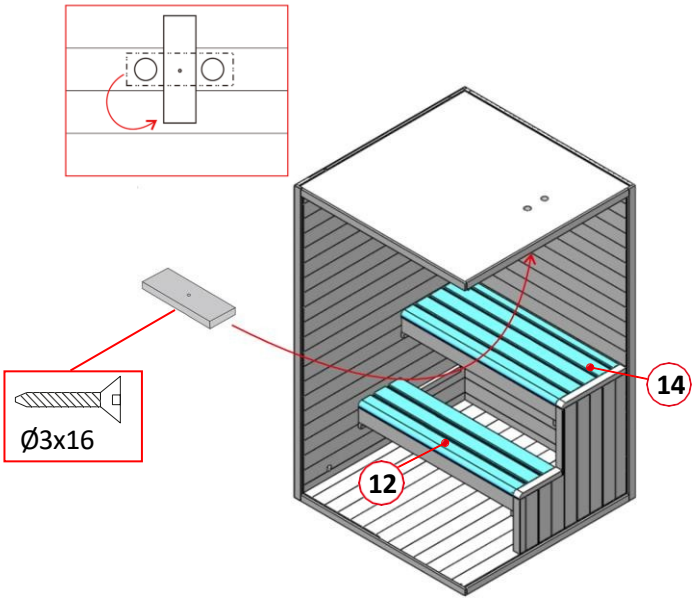

Step 7: Assembling the backrest

- Screw the backrest (**15**) 300 mm above the bench to the back wall.

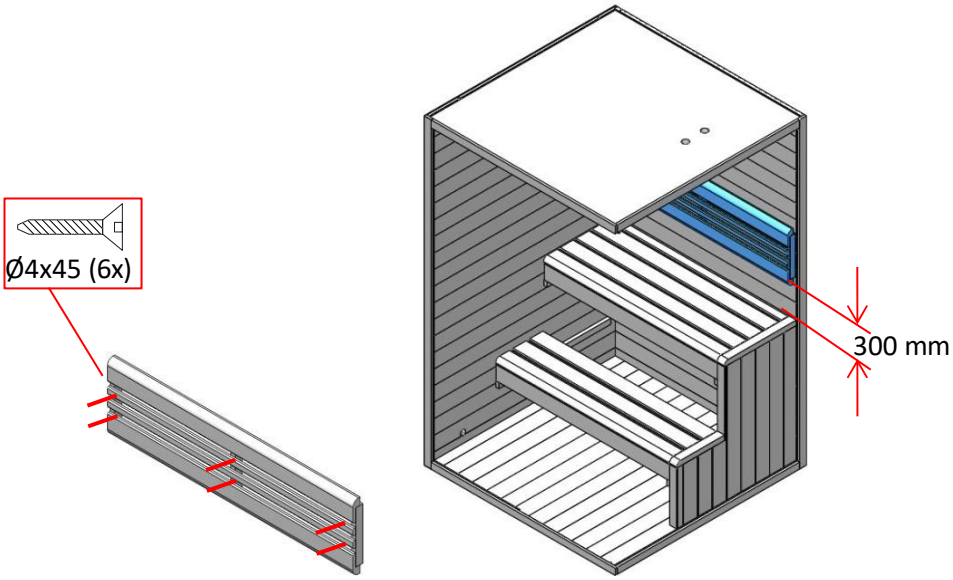

Step 8: Assembling the oven safety grid

- Mount and screw the oven guard (**16 / 17 / 18 / 19**).
- Place the oven guard in the sauna cabin.

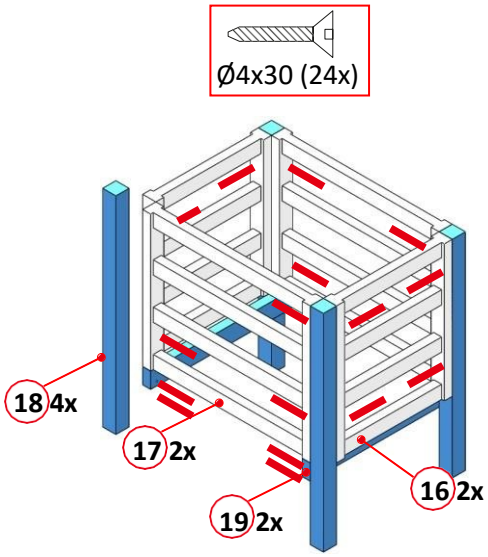

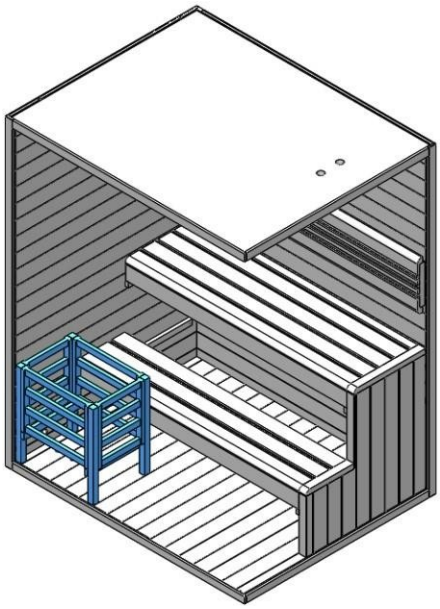

Step 9: Place the oven in the oven safety grid

- Connect the mains cable to the sauna heater according to the wiring diagram.
- Slide the drip tray (**24**) under the oven.
- Lift and place the sauna heater (**23**) in the heater guard.
- After connecting the sauna heater, lead the power cable through the hole in the sauna roof to the outside.

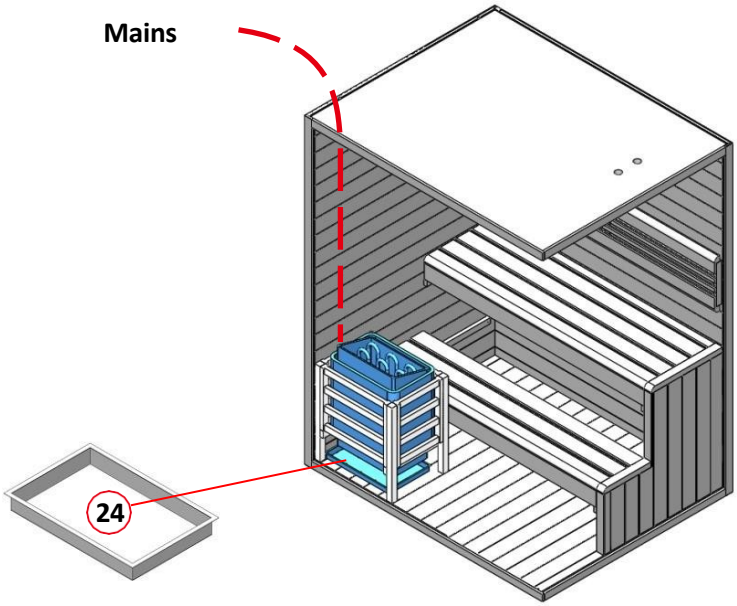

Note

The heater must **not** be placed directly on the sauna floor. The sauna heater must be at a distance from the sauna floor to ensure good air circulation. The drip tray under the heater is used to collect the excess water from the infusion.

Step 10: Mounting and connecting the sauna lamp

- Screw the bulb (max. 40 W, E27, not included) into the lamp sockets.

Caution: Have the installation of the sauna lamp carried out by a qualified electrician.

- Screw the sauna lamp (**22**) to the back of the side wall, there is a cable gland for the mains cable.
- Then screw the lamp protection grille (**21**) above the sauna lamp to the sauna side wall (**see marking**).
- This can be connected to a power supply (socket or switch) after installation.

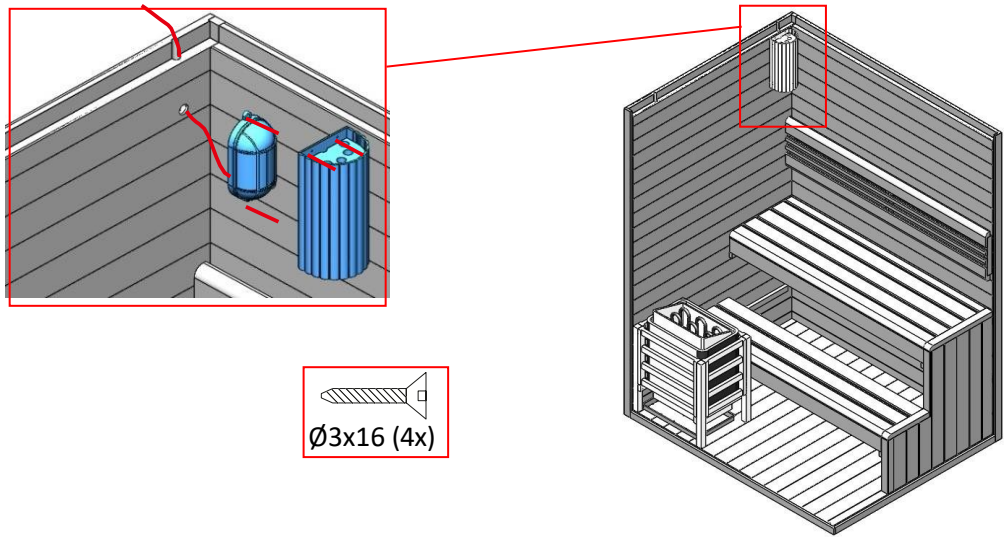

Step 11: Mounting the glass door and the door handle

- Slide the glass clip onto the top / front of the glass door (**7**).
- Slide the door hinge (**25**) onto the bottom of the glass door (**7**) and fix it (do not tighten it yet).
- Slide the upper door hinge (**25**) into the receptacle in the sauna roof.
- Place the glass door (**25**) at the bottom of the hinge holder and slide the glass door (**7**) into the upper hinge and fix it.
- Align the glass door and tighten the door hinges.
- Then mount the door handle (**20**) on the glass door and screw it from the inside. (Handle / glass door / handle). Then fit the wooden cover caps in the holes of the door handle.

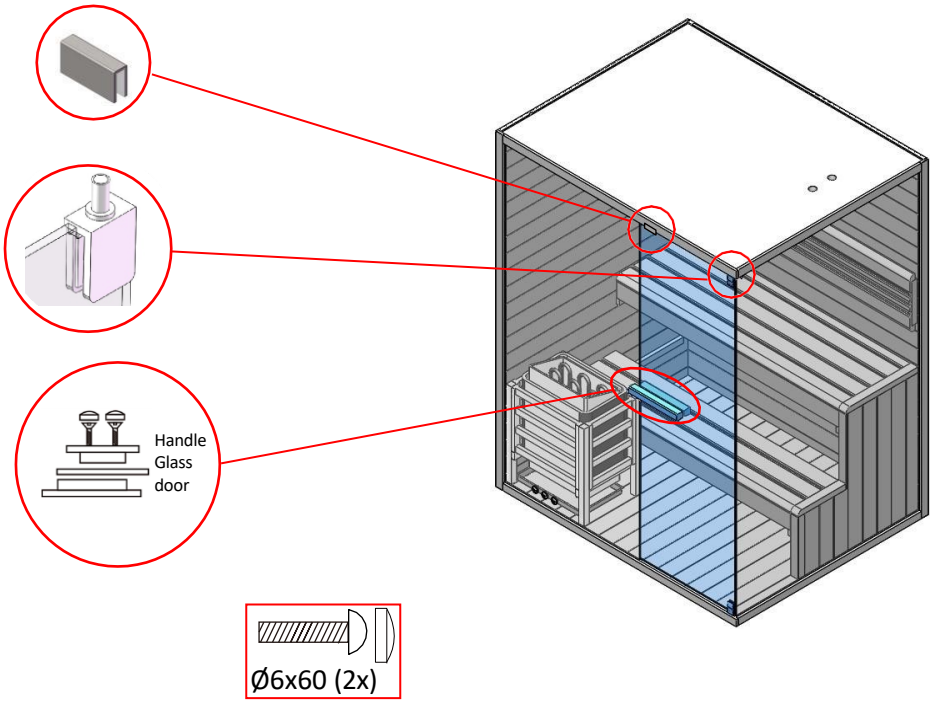

Step 12: Fitting the rubber seal

- Press the rubber seal (**27**) into the groove (between the sauna wall and the glass pane) from the outside.
- Alternatively, the rubber seal can also be installed between the roof and the glass pane.

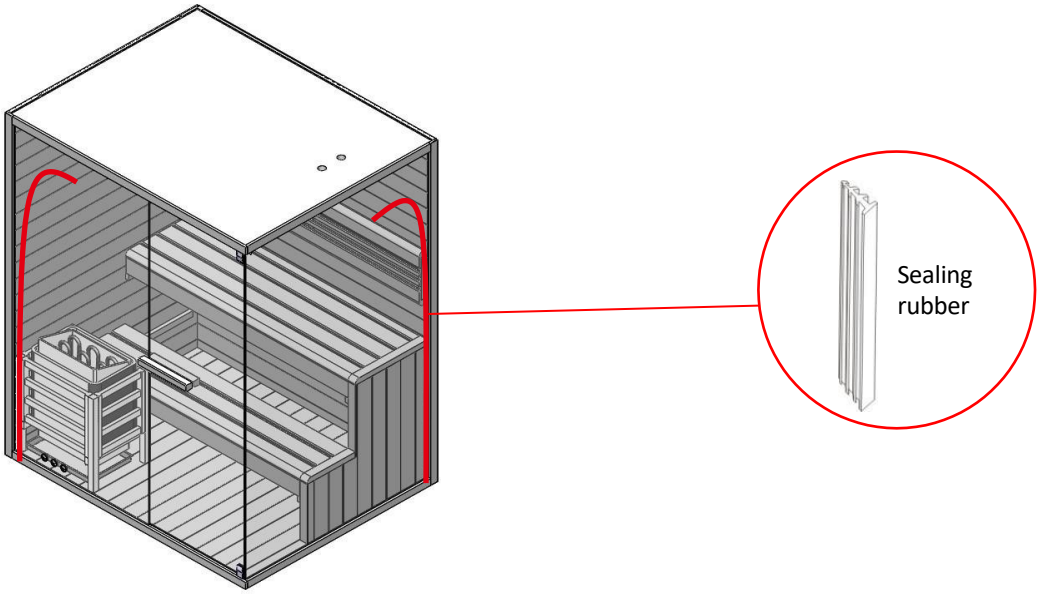

Step 13: Attach thermometer and hourglass

- Place the thermometer and the hourglass at the desired position on the wall. We recommend not to mount the thermometer and the hourglass above the stove. Hang the hourglass so that other accessories do not hang too close to it, the hourglass must be able to turn.

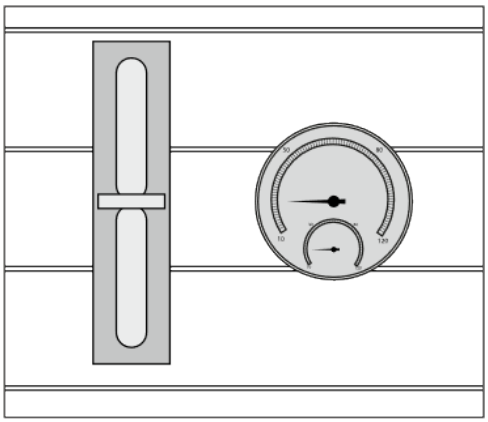

5.3. Sauna heater model: SCA-45

General

The instructions refer to the sauna heater. They contain important information on assembly, operation and use. Read the instructions carefully, especially the safety instructions and operation, before assembling and operating the sauna heater and keep them in a safe place. Only use the sauna heater as described in these instructions to prevent accidental injury or damage. If the sauna heater is passed on to third parties, these instructions must also be handed over.

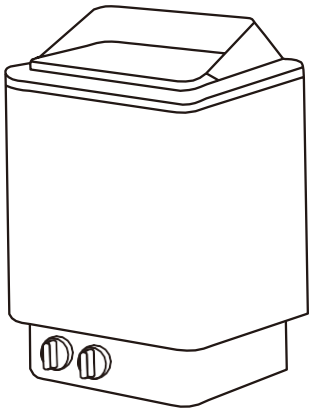

5.4. Safety instructions

Risk of injury

Improper handling of the sauna heater can lead to injuries.



- **Only** install the sauna heater if the scope of delivery is complete and undamaged.
- **Risk of electric shock**: The installation and maintenance work of the sauna heater and the sauna lamp **must be** carried out by a qualified electrician in compliance with the current, valid electrical safety regulations.
- **Danger to life due to electrical voltage**: There is an immediate danger to life if live parts are touched. Damage to the insulation or individual components can be life-threatening. -> If the insulation is damaged, switch off the power supply immediately and arrange for repairs.
- After use, make sure that the sauna heater is switched off and the timer is set.
  is exactly at "**0**".
- **Do not** turn the timer knob too far, as this may result in the sauna heater not switching off and continuing to run without a time limit.
- Do not throw away sauna stones.
- Stack the sauna stones so that they do not fall between the heating elements. Do not press the sauna stones between the heating elements.
- Do not drop the sauna stones into the sauna heater, place the sauna stones carefully.
- Avoid direct pressure on the heating elements when stacking the sauna stones.
- Lay the large sauna stones downwards when filling. Make sure that they are not placed too close together so that the air can still circulate.
- Remove broken or damaged sauna stones from the sauna heater.
- Do not put too many sauna stones on the sauna heater.
- Do not place any objects on the sauna stones, the ventilation of the product must remain guaranteed.
- The sauna heater and the sauna stones can burn your skin.

- The warranty claims for electric sauna heaters do not cover the improper use of sauna stones, the use of sauna stones that are too small and block the ventilation of the sauna and other obstructions to the ventilation of the sauna caused by the accumulation of other objects.
- Excessive moisture can cause electrical equipment to malfunction.
- Do not pour too much water on the sauna stones, this can lead to excessively hot steam.

5.5. Installation and electrical connection of the sauna heater

Attention: Read the assembly instructions completely and carefully before use.

- **Only** install your sauna heater if the scope of delivery is complete and undamaged.
- Make sure that all components are undamaged.

Installation and electrical connection of the sauna heater

Only a qualified electrician may carry out the mains connection of the sauna heater, taking into account the current, valid electrical safety regulations.

Install the sauna heater on the wall or on the panel of the heater with the screw provided in the heater according to the minimum safety distances and volumes.

- The electrical connection of the sauna heater may **only** be carried out by a qualified electrician, taking into account the current, valid electrical safety regulations.
- The drip tray must be placed under the sauna heater.
- Lift and place the sauna heater in the heater protection grid, making sure that it is not directly on the sauna floor so that the air can circulate well.
- The wall by the sauna heater must not be covered with materials such as asbestos or eternite sheets, etc., as this type of covering can cause high temperatures and a risk of burns.
- Use qualified materials for the ceilings and walls.
- Each sauna must be connected to its own electrical circuit. Do **not connect any** other electrical appliances to the same circuit.
- The mains cable for the power supply must be made of REWE rubber-insulated cable or an equivalent material. Do not use a cable made of PVC, as this can become porous due to heat.
- Connect the mains cable to the sauna heater as shown in the connection diagram. (**See connection diagram**). Then lead the power cable through the hole in the sauna to the outside and connect it to its own power circuit. (This work **must be** carried out by a qualified electrician.

Wiring diagram

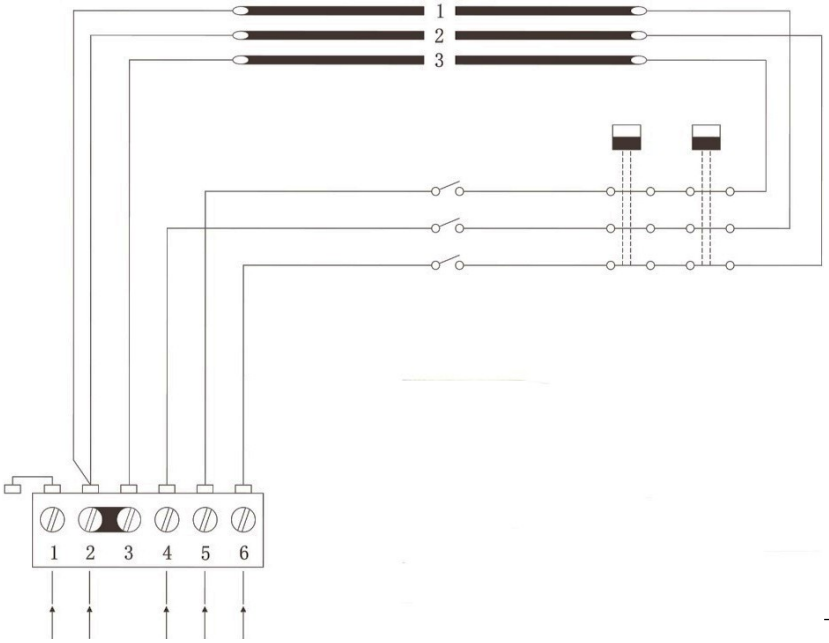

NL1 L2 L3

380 V 3N ~ / 415 V 3N ~

L1 L2 L3:	Connection of the phases
N:	Neutral conductor
⏚	Earth connection

- If the connection or cables are higher than 1000 mm above the sauna floor or walls, they must be able to withstand a temperature of at least 170 °C. Electrical appliances installed higher than 1000 mm from the sauna floor must be approved for use at an ambient temperature of 125 °C (note T125).

Connect lamps

The lamps of the sauna can also be connected in the junction box. These can use the same cross-section of the connection cables as for the sauna heater.

Attention: The upper screws must be firmly tightened, the minimum distance between the screw head and the wall must be 3 mm.

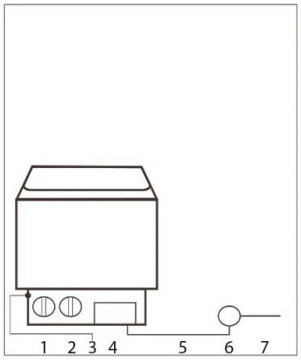

1 Mains switch
2 Thermostat
3 Temperature controller
4 Control
5 Mains cable
6 Junction box
7 Connecting cable

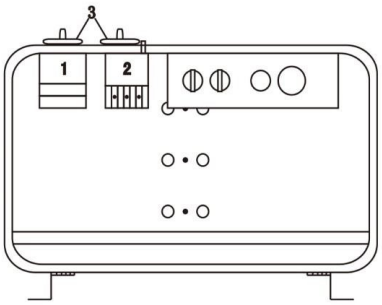

Model	Power	Cable for	
FK-45	KW	380 V3 ph 415 V3 ph mm^2	220 V1 ph 240 V1 ph mm^2
	4.5	5 x 1.5	3 x 4

6. Application

6.1. Safety instructions

The following health and safety information must be read carefully.

Risk of injury

Improper handling during operation can lead to injuries



- No modifications may be made to the product.
- Before switching on the sauna heater, make sure that no objects are stacked on the product and that they are at a safe distance.
- Check the timer that it is set to "**0**" after leaving the sauna.
- **Do not** overtighten the knob of the timer, as this may cause the sauna heater not to switch off and to continue running without a time limit.
- Children over 6 years of age may only use the sauna under adult supervision.
- Keep children away from the sauna and the sauna heater.
- During commissioning, the product **must** be under constant supervision.
- **Risk of burns, electric shock:** Do not touch the sauna lamp during sauna operation.
- **Risk of burns:** Keep away from heated and hot surfaces. Do not touch the sauna heater, sauna stones and metallic objects during heating and sauna use.

- **Burn hazard:** To replace the bulb, first let the sauna cabin and the bulb cool down.
- **Danger of scalding:** Keep at least 30 cm away from the hot, heated sauna heater.
- **Danger of scalding:** Do not pour water on the sauna stones if someone is in the direct vicinity of the sauna heater. The hot water can splash onto the sauna user.
- **Slip hazard:** Watch out for slippery floors when entering the sauna.
- Do not pour too much water on the sauna stones, this can lead to excessively hot steam.
- A sauna session can cause medical problems for the sauna user. The following group of people should consult a doctor beforehand:
  Pregnant women, heart disease, high blood pressure, circulatory problems, after taking medication, in diabetes, in case of indisposition.
- Consult a doctor before using the sauna if you experience any symptoms of illness, e.g. if there are signs of a cold or flu.
- Do not go to the sauna if you are under the influence of narcotics (alcohol, medication, drugs, etc.).
- A sauna session should not last longer than half an hour. A sauna session that is too long can lead to rapid heartbeat, slight heart pain, a feeling of weakness or dizziness. If any of the above symptoms occur, the sauna session should be stopped immediately.
- Staying in a hot sauna for a long time can increase the blood temperature, which can have a negative effect on the body.
- Do not sleep in the hot sauna.
- Do not store bottles of infusion in the sauna.
- Drink enough fluids (e.g. water) before and after the sauna session.
- Keep your skin cool if necessary.

Risk of damage



- Before each use and at regular intervals, check all fastenings and the product for visible damage. Pay particular attention to load-bearing components. In case of material changes or damage, take the product out of operation. Contact the manufacturer or its customer service for further instructions and, if necessary, spare parts.
- Check the fastening screws etc. at regular intervals and tighten them if necessary.
- Use the sauna completely dry, as the wood can be damaged by water.
- Do not force the sauna stones between the heating rods.
- The sauna stones do not have to fit and be placed completely between the heating rods.
- **Recommendation:** Use and sit on 2 - 3 towels during the sauna session, this will protect the wood.
- **Fire hazard: Do** not use the product for drying laundry.

6.2. Initial commissioning

The sauna heater and the sauna stones emit odours during the first start-up, ventilate the sauna cabin after heating up so that an air exchange can take place. Do not stay in the sauna cabin during the first heating up.

6.3. Operation

Attention!

Please check with the fire safety authorities about the use of fire walls and insulation. The ventilation openings must not be insulated.

- The sauna offers space for max. 3 persons.
- Always place the drip tray under the sauna heater so that excess water, e.g. from the infusion, can be collected. If the drip tray is filled with water, it must be emptied.
- The sauna heater is equipped with a timer and a temperature control, where the time and temperature can be set and controlled. The sauna heater can be switched off at the timer in the "**0**" position.
- Sufficient air circulation is essential for sauna use. The air in the cabin should be renewed 6 times per hour. Properly installed ventilation creates pleasant sauna conditions and also saves energy.
- To maintain the temperature during the sauna session, the vent must be closed.
- The ventilation openings must not be blocked during operation.
- After the sauna, open the ventilation and also the sauna door so that the sauna dries.
- Only use drinking water for the infusion. Other water or liquids may damage the heating elements and the guarantee will be invalidated.
- Do not use too much water for the infusion, this can cause excessive hot steam.
- We recommend that you do not use the sauna for more than 30 minutes per session. Sweat production starts after approx. 8 - 15 minutes after entering the sauna.
- Do not eat for about one hour before using the sauna, as this may cause discomfort.
- Only use the sauna when your body is relaxed and run down, not after a hard workout or hard work.
- The function of the sauna heater is to bring the temperature of the sauna cabin to a suitable and pleasant temperature. The temperature is brought to a suitable temperature in about one hour, which is about + 65 °C.

6.4. Operating elements

Temperature control

The sauna heater can reach the preset temperature in 30 to 60 minutes, depending on the size of the sauna room, and this can be regulated by the thermostat to the temperature that is comfortable for you. A thermostat with a three-phase connection can ensure that a comfortable temperature is maintained in the sauna room. The temperature is set using the control dial.

min.

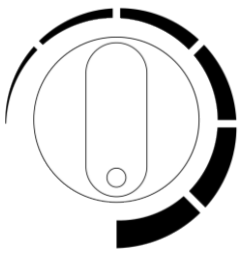

max.

Timer

The timer is the "off switch" for the sauna heater, this must be set exactly to "**0**" so that this is switched off. The heating time is set using the rotary control.

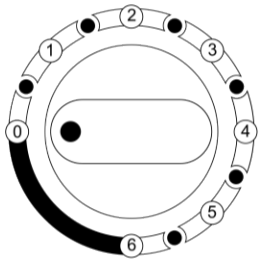

= Off

Time span0

1 = 30 min
2 = 60 min
3 = 90 min
4 = 120 min
5 = 150 min
6 = 180 min

6.5. Sauna stones and sauna infusion

Information about the sauna stones

- **Recommendation:** Before using the sauna stones for the first time, clean them of dust and then place them in a stack in the sauna heater.
- Place the large sauna stones at the bottom of the sauna heater. Make sure that they are not stacked too densely so that the air can still circulate.
- The sauna stones must be of the best quality. Use a solid sauna stone that is especially suitable for use in electric sauna heaters.
- Place enough sauna stones (10 - 15 kg) in the sauna heater, but only after the installation of the sauna heater and the control box has been completed.
- The diameter of the sauna stones is usually 5 to 25 cm.
- The sauna stones should be intended for use in sauna stoves and should be made of solid volcanic rock. The surface should be pointed and rough, such as peridot, olivine.
- Do not use loose or porous ceramic stones, these can cause damage to the sauna due to high temperatures.
- Do not place sauna stones directly on the heating elements.
- Do not stack the sauna stones in a high pile.
- There must be no objects or devices in the stone chamber or near the sauna heater that change the amount or direction of the air flow passing through the sauna heater.

Sauna infusion

- When the sauna cabin is heated up, the air becomes dry. An infusion with an appropriate amount of water on the hot sauna stones brings the humidity to the right level and the skin feels the effects of the increased humidity.
- The right level of moisture gives the skin natural perspiration and gentle breathing.
- Too high a temperature and humidity can lead to an uncomfortable feeling.
- A longer stay in the sauna cabin can lead to an increase in body temperature. The sauna user should feel comfortable
- When infusing, the capacity of the wooden ladle should **not** exceed 200 ml.
- Only tap water / drinking water should be used for the infusion.
- Only fragrances designated for this purpose may be used for the infusion. Follow the instructions on the package.

Water property	Effect	Recommendation
Humus content	Colour, taste, deposits	<12 mg/l
Iron content	Colour, odour, taste, deposits	<0.2 mg/l
Water hardness: The most important substances are: Manganese (Mn) and lime, i.e. Calcium (Ca).	Deposits	Mn: <0.05 mg/l Ca: <100 mg/l
Chlorinated water	Harmful to health	Must not be used
Salt water	Rapid corrosion	Must not be used

6.6. Sauna recommendations

Instructions for sauna

- Cleanse your body before taking a sauna.
- Only stay in the sauna as long as it is pleasant.
- Forget all stress and relax.
- Coordinate with the other users regarding the infusions.
- The heated skin should cool down in the meantime, if possible go swimming in a cool pool or take a cold shower.
- Wash after taking a sauna.
- Rest until a balanced feeling arises.
- It is best to drink clear water or a soft drink to stabilise your fluid balance.

Hygiene in the sauna cabin

- Use towels to protect against sweat on the benches.
- Clean the benches, the sauna walls and the sauna floor at least every six months. Use a sauna cleaning agent and a brush for this.
- Wipe off dust and dirt from the sauna heater with a damp cloth.
- Remove limescale from the stove with 10 % citric acid.

7. Troubleshooting

If faults occur in the operation of the product, please check the following fault causes using the following table. If the fault cannot be rectified, please contact the customer service:

Error	Possible cause	Solution
The sauna wobbles or swings	• The sauna stands on an uneven loose surface	• Place the sauna on a flat solid surface.
Heat escapes from the sauna	• Door is slightly open	• Close door
The sauna heater cannot be switched on	• No mains voltage	• Plug in the mains cable • Check the fuse or FI switch of the power supply • The main switch of the power supply is off.

Error	Possible cause	Solution
The sauna heater does not switch off	• The timer is not exactly set to "**0**". • The timer has been turned past the 0 position	• Set the timer exactly to "**0** place • Set the timer exactly to "**0** place
The sauna heater does not work properly	• Overheating protection has triggered • Thermostat not set correctly • Timer is set to "**0**	• Contact the customer service • Set the temperature correctly • Set timer
The sauna heater does not heat up properly	• Heating elements are not in order • Temperature does not rise • Sauna stones are too close together • Ventilation closed	• Check the heating elements • Increase temperature • Re-stack the sauna stones so that the air can circulate. • Open the ventilation
The sauna heater heats up quickly, the sauna stones do not get warm properly. Water drains behind the sauna stones.	• Ventilation closed • Thermostat regulates the temperature down • The heating power is too high	• Open the ventilation • Contact the customer service • Contact the customer service
Noises from the sauna	• Sauna stones and sauna parts can make noise when they heat up or cool down. • Timer ticks loudly	• No error • No error

8. Maintenance and care

Attention! All maintenance must be carried out by qualified technical personnel.

- High humidity in the sauna cabin does not harm the wood.
- The sauna room must be well aired after the sauna session and an appropriate drying phase should be observed.
- Spray the wood (walls and benches) in the sauna cabin with water.
- Wipe wooden surfaces with a damp cloth.
- Depending on the use, treat the seating surfaces with fine sandpaper at least once a year.
- If the benches are very dirty, they can be cleaned with a 3% hydrogen peroxide solution.
- If the sauna exterior walls are scratched or scuffed, they can be treated with furniture polish, oil or other furniture care products.
- Scratches or scuffs in the cabin can be sanded.
- Some of the sauna stones break naturally during use. Refill the sauna heater with new sauna stones.
- Remove the sauna stones at least once a year and reposition them. Also remove dust and small stones from the lower part of the sauna heater. This makes the sauna more efficient and prevents the heater from overheating.



Disinfectants are highly corrosive!
Follow the instructions of the detergent or disinfectant manufacturer. Wear protective gloves when cleaning.



Attention! The sauna cabin must **not be** painted, varnished or impregnated on the inside. Wooden parts (e.g. benches, protective grilles, etc.) that are used inside the sauna cabin must also not be painted, varnished or impregnated. These surfaces develop toxic gases when heated.

9. Disassembly

9.1. Safety instructions

Risk of injury
Improper handling during disassembly can lead to injuries



- Disconnect the product from the power supply before disassembly. Contact with live components may result in electric shock, burns or death.
- The product has a high weight and large dimensions, at least 2 people are required for disassembly.
- Secure the product against falling before disassembly.

Disassembly of the product must be carried out in reverse order to assembly. (**see chapter Assembly**)

10. Disposal instructions



- Dispose of the product and all components in accordance with local and country-specific regulations, thereby avoiding damage to the environment.
- Our packaging is made from environmentally friendly materials. These can be recycled and thus serve as valuable raw materials. Dispose of the packaging material (cardboard boxes, dirty packaging, etc.) separately and properly in accordance with the applicable national regulations.
- Contact the manufacturer if you are unsure about disposal.
- You can also obtain information on proper disposal from local waste disposal centres.

11. Electrical and electronic equipment - Information for private households

The Electrical and Electronic Equipment Act (ElektroG) contains a large number of requirements for the handling of electrical and electronic equipment. The most important ones are summarised here.

1. Separate collection of waste equipment

Electrical and electronic equipment that has become waste is referred to as WEEE. Owners of WEEE must dispose of it separately from unsorted municipal waste. They must separate used batteries and accumulators that are not enclosed in the WEEE, as well as lamps that can be removed from the WEEE without destroying it, from the WEEE without destroying it before handing it in at a collection point. Separate WEEE to prepare it for reuse.

2. Options for returning old appliances

Owners of old appliances from private households can hand them in at the collection points of the public waste management authorities or at the take-back points set up by manufacturers or distributors as defined by the Elektro G. An online list of collection and take-back points can be found on the website: https://www.stiftung-ear.de or https://www.take-e-back.de.

3. Data protection notice

Old devices often contain sensitive personal data. This applies in particular to information and telecommunication technology devices such as computers and smartphones. In your own interest, please note that each end user is responsible for deleting the data on the old devices to be disposed of.

4. Distributors' take-back obligation

Distributors with a sales area for electrical and electronic equipment of at least 400 m2 and distributors of foodstuffs with a total sales area of at least 800 m2 who offer electrical and electronic equipment several times in a calendar year or permanently and make it available on the market are obliged to do so,

- when supplying a new EEE to an end-user, to take back free of charge at the place of supply or in the immediate vicinity thereof an old EEE of the end-user of the same type which fulfils substantially the same functions as the new EEE; and
- to take back, at the end-user's request and free of charge, WEEE that does not exceed 25 cm in any external dimension in the retail outlet or in the immediate vicinity thereof; the take-back may not be linked to the purchase of an EEE and is limited to three WEEEs per type of equipment.

5. Meaning of the "crossed-out dustbin" symbol



The symbol of a crossed-out wheeled bin regularly displayed on electrical and electronic equipment indicates that the respective device must be collected separately from unsorted municipal waste at the end of its service life.

- Manufacturer registration number
- As a manufacturer within the meaning of the ElektroG, we are registered with the responsible Foundation Elektro-Altgeräte Register (Nordostpark 72, 90411 Nuremberg) under the following registration number: WEEE Reg. No. DE86467979

Home Deluxe GmbH
Schanzeweg 2
32312 Lübbecke Germany
Tel.: +49 (0)5743 6181-0
www.home-deluxe-gmbh.de

GA-030-02-SHADOW L
2023/05